TECHNOLOGY FOR THE WELDER'S WORLD.

Simple automated welding of long seams and tubes:

AutoGuide Plus

ABICOR BINZEL® ROBOTIC SYSTEMS

www.binzel-abicor.com

AutoGuide Plus: Makes processes easier and more precise through semi-automated welding.

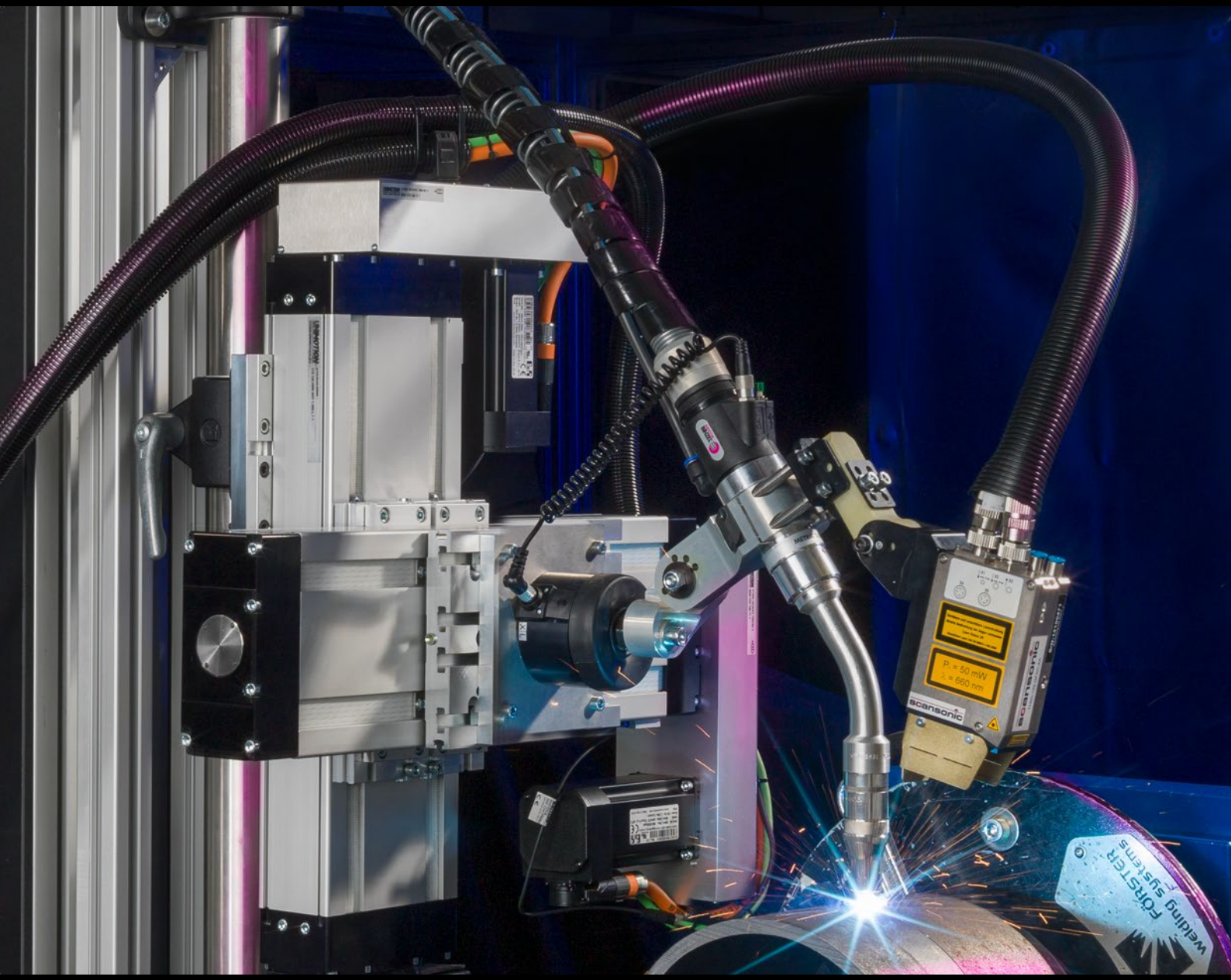

This is what production has been waiting for.

The 2-axis torch guidance system with optical seam tracking is a valuable acquisition for simple, repetitive welding tasks that require precision. Ideally suited for large, long and round components, the AutoGuide Plus can handle even large quantities – reducing production times and saving costs.

Goodbye costly rework.
How often does it happen in a fully automated process that the seam is not placed where it belongs?

The AutoGuide Plus with optical seam tracking finds every gap and weld only where it is required. Costly reworking and even rejects are a thing of the past.

Easy to handle.
The implementation of AutoGuide Plus in the existing system is remarkably simple: just plug & weld. Once connected, you can practically start searching for gaps immediately.

Quickly ready for use:
Diverse industries and applications.

Large quantities.
Because AutoGuide Plus is completely self-sufficient, the welder can even operate several welding processes simultaneously. But this is not the only thing that increases production efficiency, the AutoGuide Plus also improves the precision of welding. In combination with a turntable, this system joins pipes and cables. Mounted on a welding portal, it can weld long horizontal seams such as truck trailers and freight trains. When mounted on a boom, it masters long vertical seams such as cranes, scaffolding, vertical pipes, etc.

Fields of application:

- **Combination with turntable** – ideal for circumferential seams
- **Mounting on welding gantries** – long horizontal seams
- **Mounting on welding gallows** – long vertical seams

AutoGuide Plus: Details at a glance.

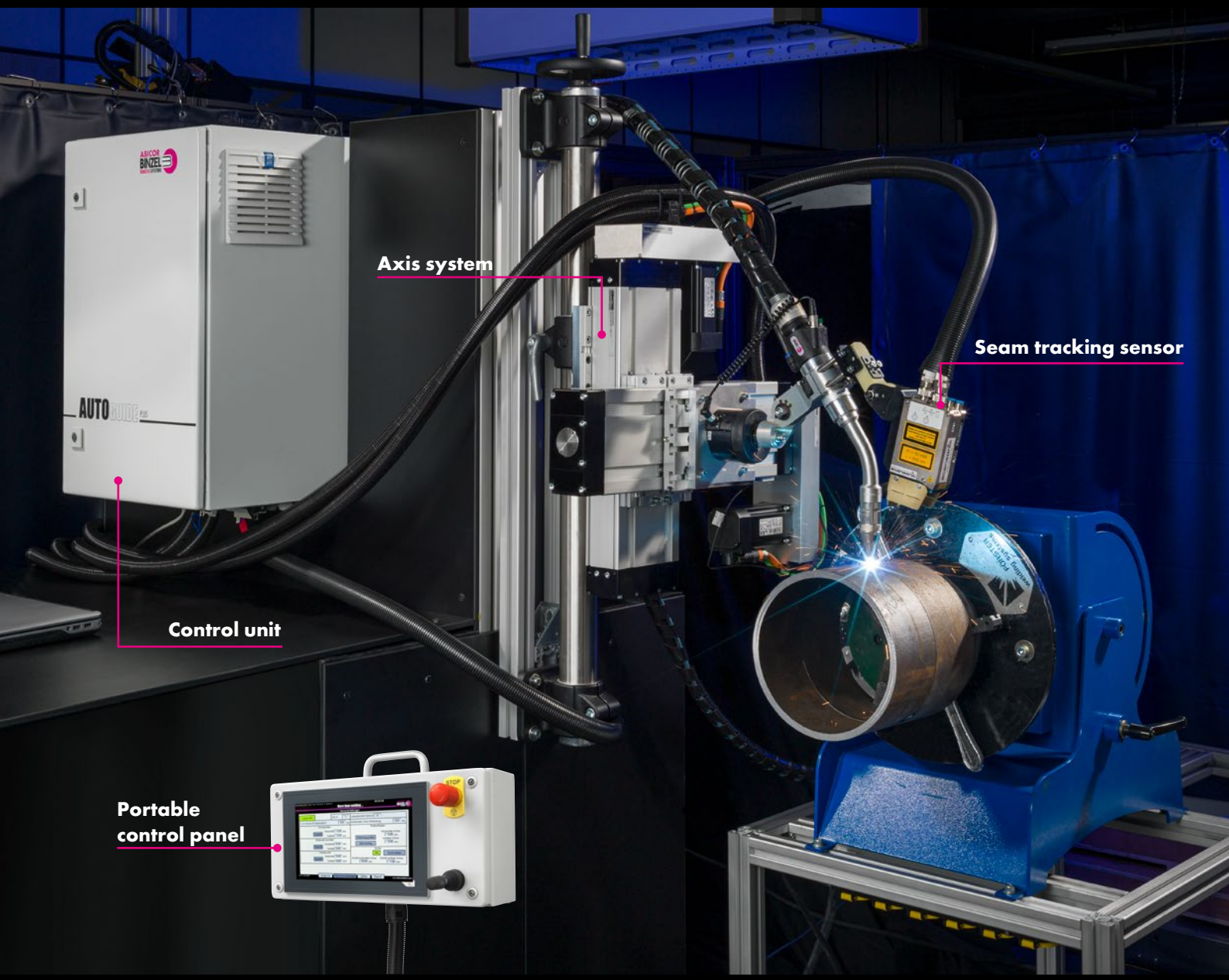

Three points to welding success.

1. Home position

Seam tracking sensor and welding torch are mounted on the axis cross. The system moves the torch to the freely definable home position via the 200 mm long x- and y-axes.

2. Search run

The axis system moves with the optical sensor and the welding torch to the set search starting position. Then the axis system begins a definable search run. Once the sensor has found the column, it transmits this position data to the axis control, which then moves the axes with the torch system and sensor in the direction of the working position.

3. Working position

After the axis system has reached the set working position, a signal is switched in the interface. This signal starts the welding process. The higher-level control system starts the control of all other components such as the welding machine or turntable.

Simple, precise, universal: Your advantages.

Automation can be simple

- Plug & Play solution with particularly simple teach-in mode
- Operating panel for easy position input
- Operating menu in different languages
- Simple assembly in production
- Robust, insensitive construction with only two movable axes

Precise work with AutoGuide Plus

- High positioning accuracy due to three-line laser
- Contactless seam tracking during the entire welding process
- High process reliability even with demanding seam tracking and correction in real time
- Great stability during measurement data acquisition
- Optional: Sensors for thick and thin sheet applications and with butt joint detection

AutoGuide Plus for universal use

- For all common welding seam shapes and surfaces
- Also suitable for reflective materials
- For large quantities
- Ideal for large, long or round components
- Digital I/O interfaces (optional ProfiNet)

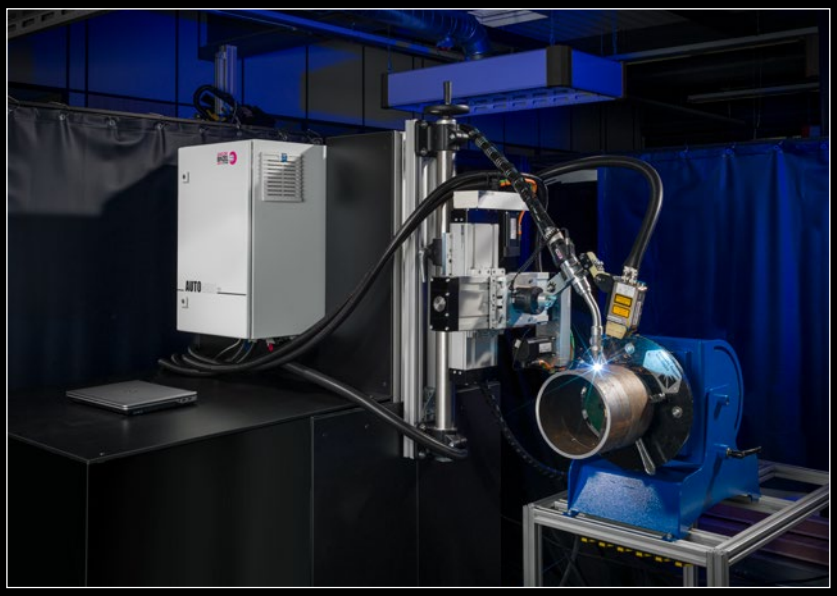

Follow me!
How optical seam tracking works.

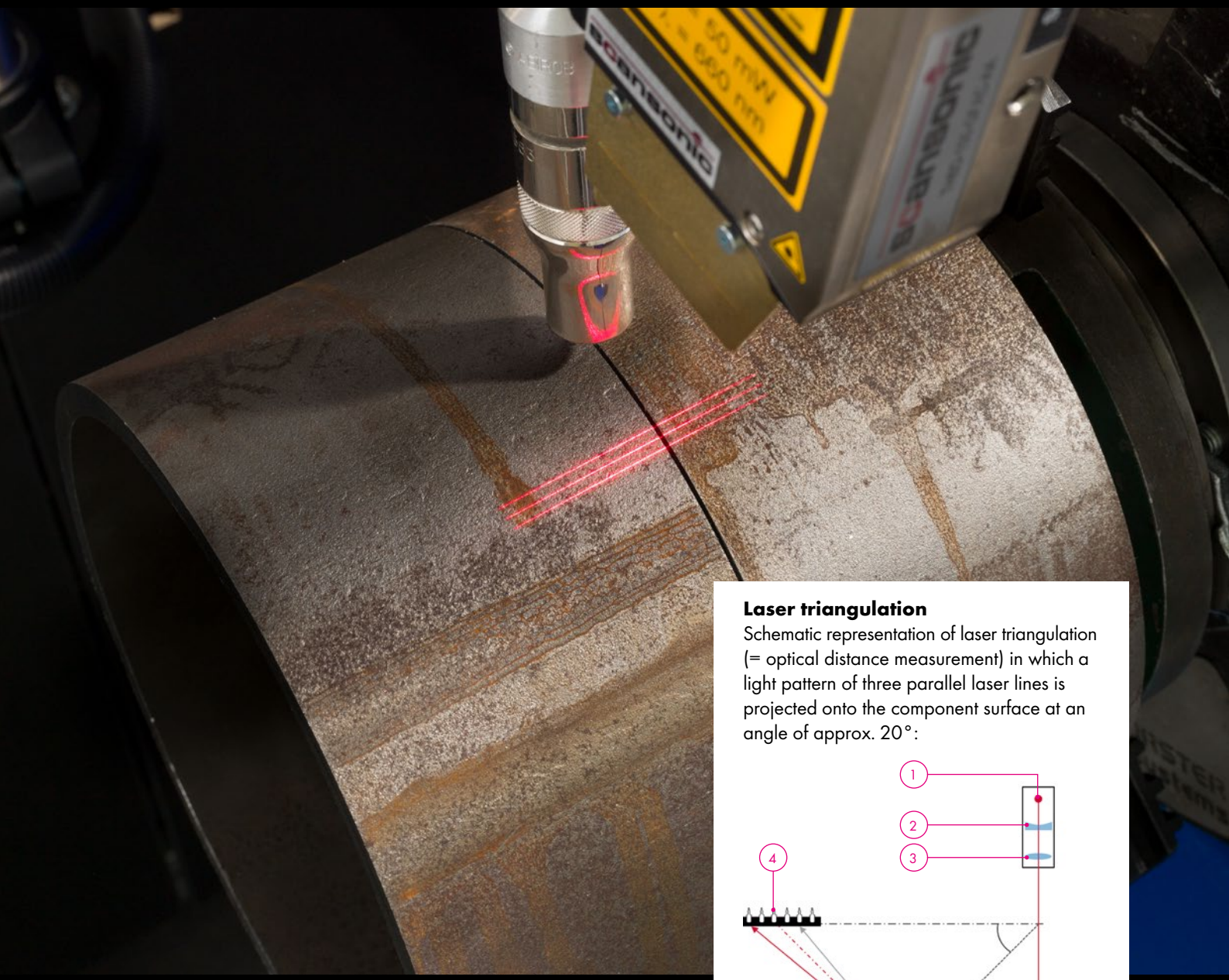

Laser triangulation
Schematic representation of laser triangulation (= optical distance measurement) in which a light pattern of three parallel laser lines is projected onto the component surface at an angle of approx. 20°:

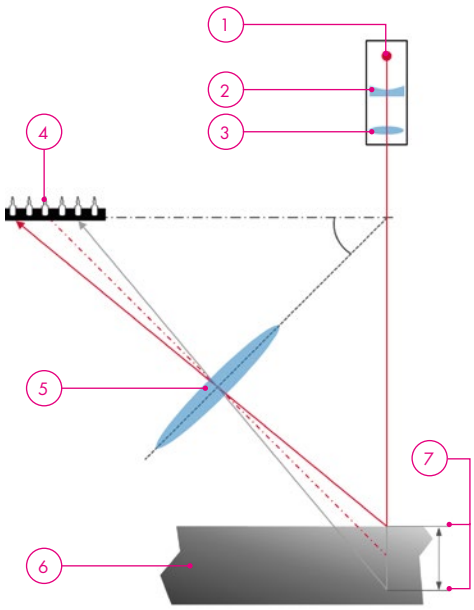

Legend:
1. Laser diode
2. Collimator optics
3. Projection optics
4. Light detector
5. Lens (receiver optics)
6. Measuring object (component)
7. Measurement 1 and measurement 2

The TH6 sensors
The optical TH6 seam tracking sensors detect and measure gaps, angles and joint contours with height offset from a gap width of 0.3 mm without contact. The TH6i even detects butt joints from a gap of 0.02 mm. They also position and guide the welding tool extremely precisely in real time.

How TH6 sensors work
Three measuring lines are generated by a line generator and projected onto the component. The resulting diffuse reflection, which lies within the field of view of the camera lens, is detected by the CMOS sensor. Laser triangulation can therefore be used to determine the working distance, position and inclination of the metal sheets to be joined.

How TH6 sensors evaluate
The current seam position as well as information about gap dimension and edge offset at the joint are recorded as measured values and sent to the sensor process computer. This computer passes the values on to the axis control and thus positions the tool.

Further information:
Technical data, options & accessories.

Technical data

Sensor	TH6D GF Standard	TH6D CF optional	TH6D KF optional	TH6i optional
Measuring lines:	3	3	3	3
Working distance:	150 mm	150 mm	150 mm	150 mm
Measurement rate:	60 Hz	60 Hz	60 Hz	60 Hz
Operating temperature:	10 °C up to 45 °C	10 °C up to 45 °C	10 °C up to 45 °C	10 °C up to 45 °C
Dimensions (W x H x D):	70 x 40 x 100 mm	70 x 40 x 100 mm	70 x 40 x 100 mm	70 x 40 x 140 mm
Measuring range (W, H):	35 mm, 60 mm	16 mm, 24 mm	40 mm, 80 mm	16 mm, 24 mm
Resolution (WxH):	0.06 x 0.10 mm	0.03 x 0.07 mm	0.08 x 0.12 mm	0.03 x 0.07 mm
Application:	Thick and thin sheet applications	Thin sheet applications	Thick sheet applications	Thin sheet applications / Detection of butt joints from 0.02 mm gap

Axis system

	Standard	Optional
Lenght x-/y-axis:	200 mm	300 mm
Load capacity per axis:	15 kg	100 kg
Application:	all standard applications	e.g. submerged arc welding

Both axis variants (200 mm and 300 mm) are available with 15 kg as well as 100 kg load capacity.

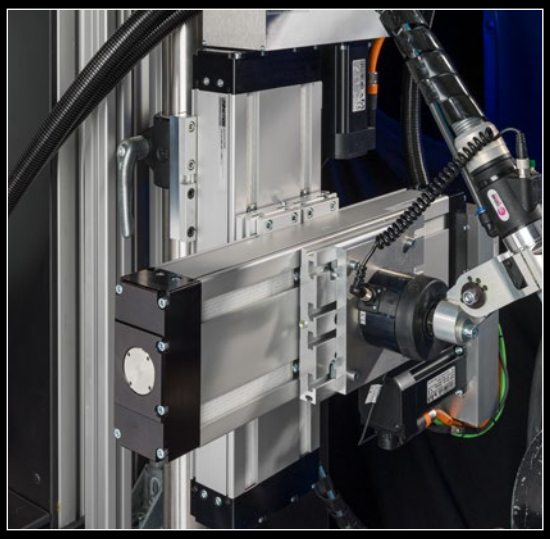

Accessories

Various air cooled and liquid cooled welding torch types, torch mounts with and without switch-off function as well as further accessories up to the complete welding equipment including power source are available to match the AutoGuide Plus system.

Order overview

The AutoGuide Plus system is available in two different lengths of the x- and y-axis as well as two different load capacities of the cross-axis. There is also a choice between straight motors or space-saving angle drives on the axes. Select the system that suits you best.

AutoGuide Plus Systems	Features	Load capacity per axis	Part-No.
	200 mm, straight motors on the axes	15 kg	514.0312.1
		100 kg	514.0313.1
	300 mm, straight motors on the axes	15 kg	514.0314.1
		100 kg	514.0315.1
	200 mm, space-saving angular drives on the axes	15 kg	514.0316.1
		100 kg	514.0317.1
	300 mm, space-saving angular drives on the axes	15 kg	514.0318.1
		100 kg	514.0319.1
	200 mm, straight motors on the axes, AC[1]	15 kg	514.0320.1
		100 kg	514.0321.1
	300 mm, straight motors on the axes, AC[1]	15 kg	514.0322.1
		100 kg	514.0323.1
	200 mm, space-saving angular drives on the axes, AC[1]	15 kg	514.0324.1
		100 kg	514.0325.1
	300 mm, space-saving angular drives on the axes, AC[1]	15 kg	514.0326.1
		100 kg	514.0327.1

[1] Optional air conditioning for the control cabinet (standard fan cooling)

Select one of the four TH6 systems to match the AutoGuide Plus system:

TH6 Systems	Features	Cable length	Part-No.
	TH6D GF Ethernet cpl. (standard)	10 m	514.5160.1
	TH6D CF Ethernet cpl. (optional)	10 m	514.5001.1
	TH6D KF Ethernet cpl. (optional)	10 m	514.5016.1
	TH6i CF Ethernet cpl. (optional)	10 m	514.5066.1

Alexander Binzel Schweisstechnik GmbH & Co. KG
Kiesacker · 35418 Buseck · GERMANY
T +49 64 08 / 59-0
F +49 64 08 / 59-191
info@binzel-abicor.com

www.binzel-abicor.com